EMERGENCY RESCUE ACCESS

GENERAL INFORMATION	
MAXIMUM CAPACITY	
PASSENGER	CREW
Up to 90	5
MAXIMUM FUEL CAPACITY	
19450 lb (8822 kg)	
2903 US gal (10989 L)	

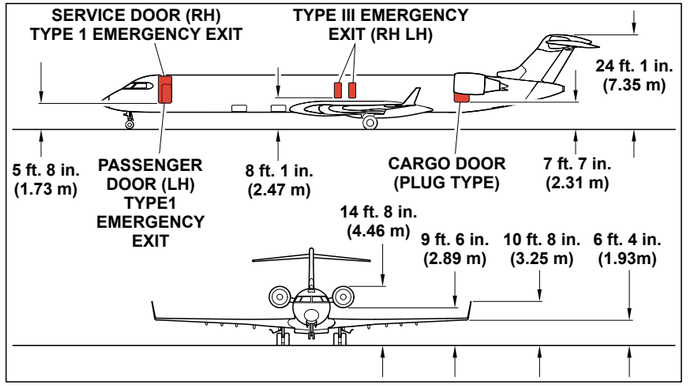

EMERGENCY EXIT LOCATIONS AND ELEVATIONS

1. WITH ALLEN KEY 5/32 TURN EACH LATCH 90°.
2. PUSH PANEL INTO LAVATORY AREA.

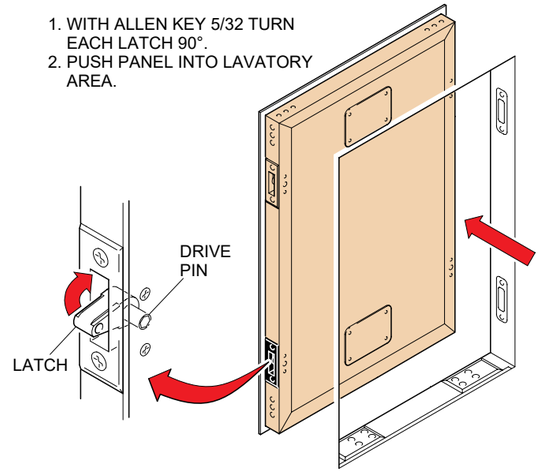

CREW ACCESS PANEL

CUSTOMER SERVICES
REGIONAL AIRCRAFT

The information, technical data and the designs disclosed herein are the exclusive property of MHI RJ Aviation ULC and its affiliates or contain proprietary rights of others and are not to be used or disclosed to others without the written consent of MHI RJ Aviation ULC and its affiliates. The recipient of this document, by its retention and use, agrees to hold in confidence the technical data and designs contained herein. The foregoing shall not apply to persons having proprietary rights to such information, technical data or designs to the extent that such rights exist.

© MHI RJ Aviation ULC and its affiliates

MHI RJ
CRJ900
MODEL CL-600-2D24 (A/C 15001, 15003 - 15990)

Crash Crew Chart

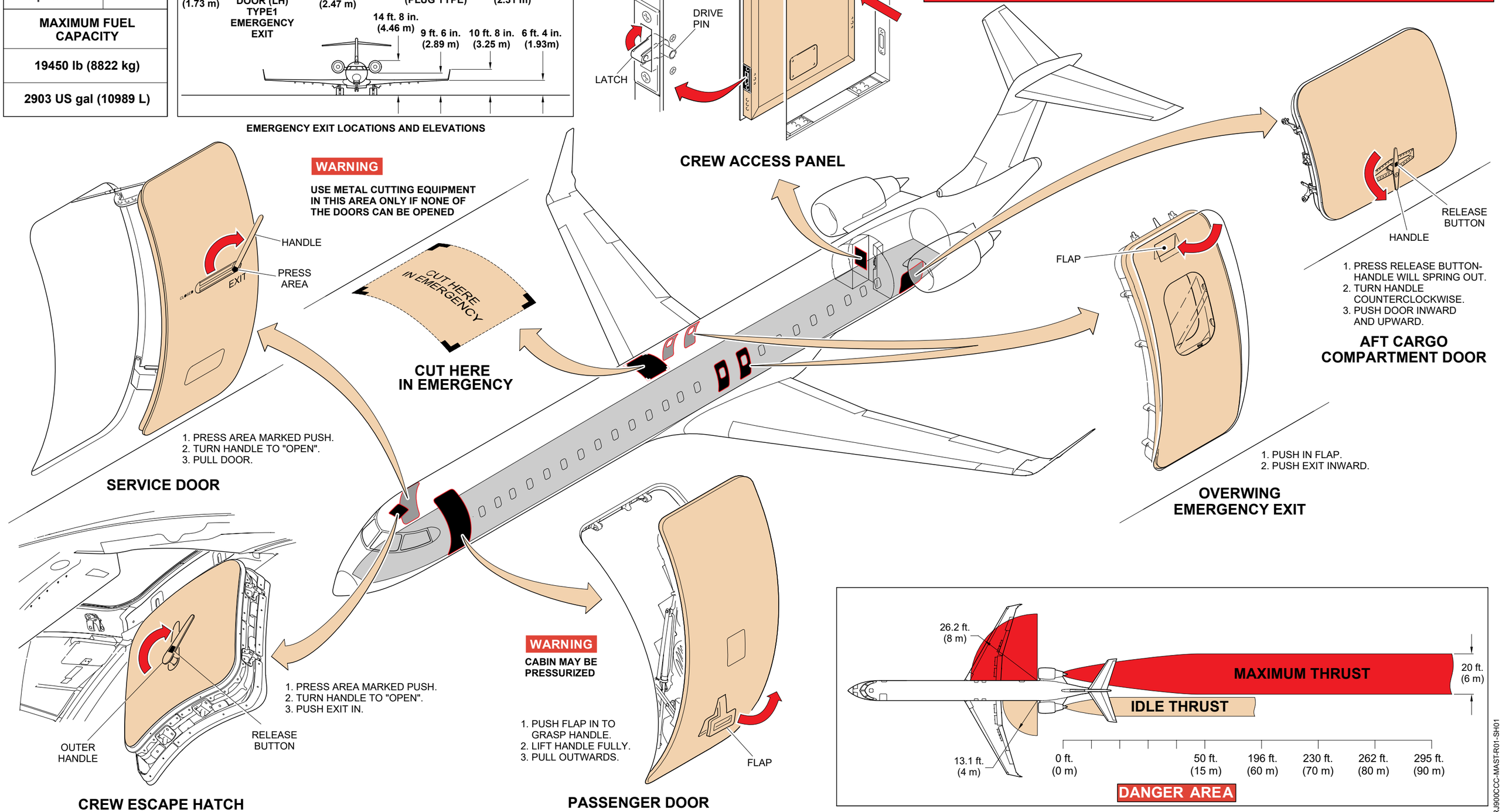

R900CCC-MAST-R01-SH01

FLAMMABLE MATERIAL & INTERPHONE LOCATION

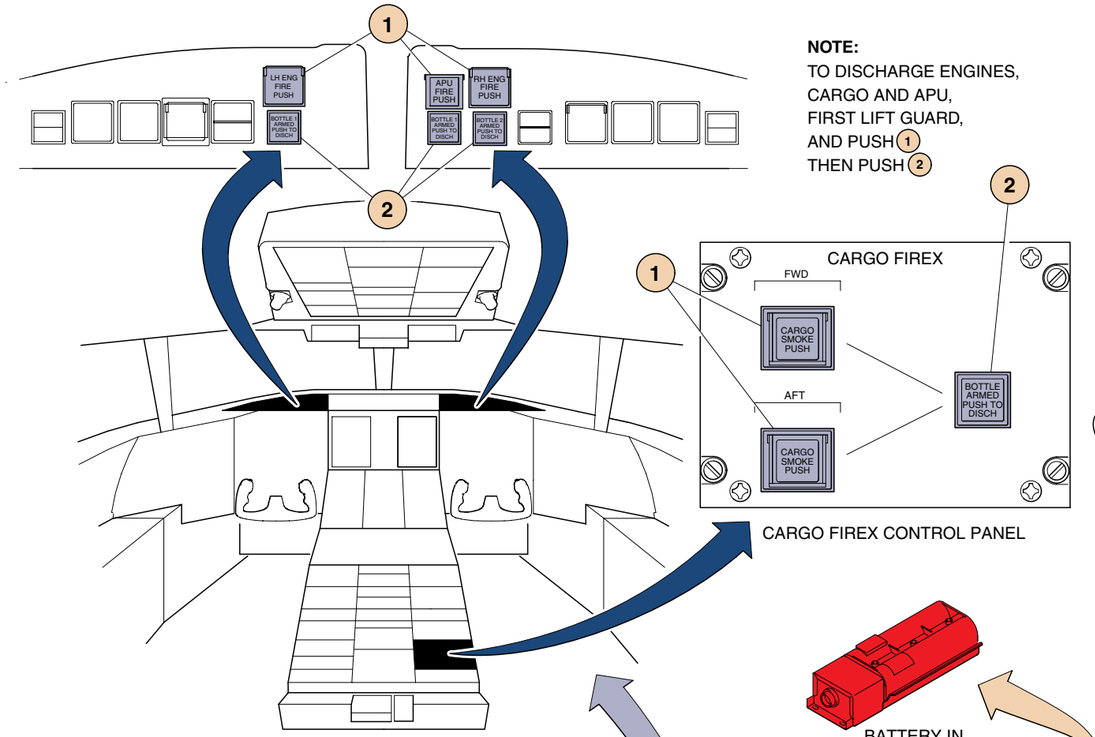

NOTE:
TO DISCHARGE ENGINES, CARGO AND APU, FIRST LIFT GUARD, AND PUSH 1 THEN PUSH 2

CARGO FIREX CONTROL PANEL

ONBOARD EXTINGUISHING SYSTEM

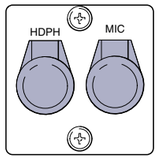

INTERPHONE

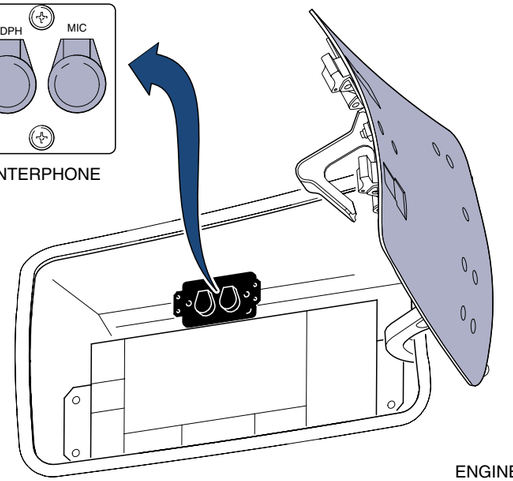

REFUEL DEFUEL CONTROL PANEL

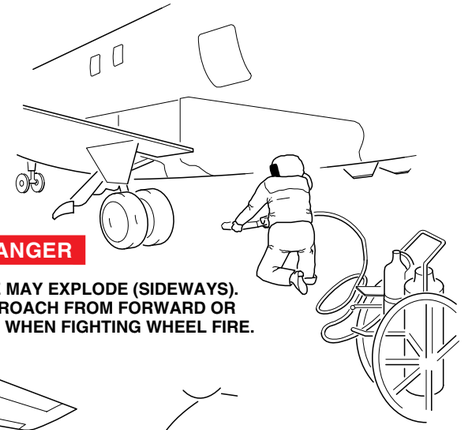

DANGER

TIRE MAY EXPLODE (SIDEWAYS). APPROACH FROM FORWARD OR AFT WHEN FIGHTING WHEEL FIRE.

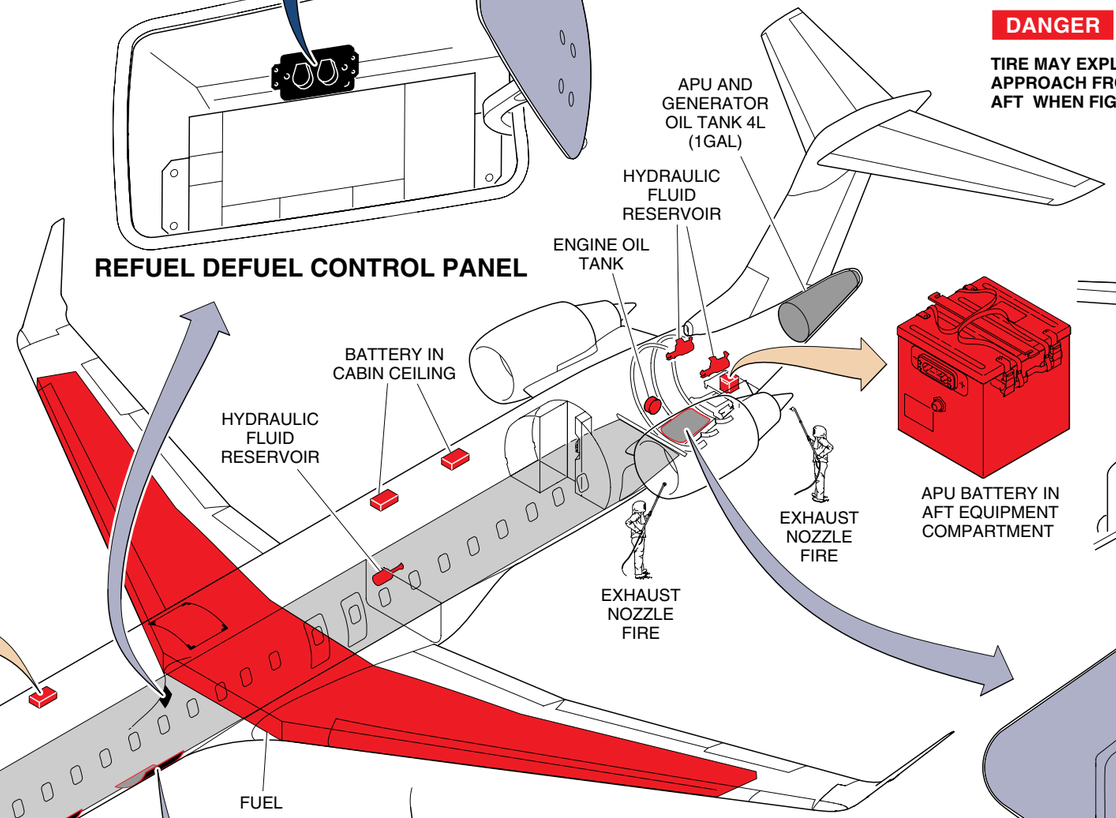

APU BATTERY IN AFT EQUIPMENT COMPARTMENT

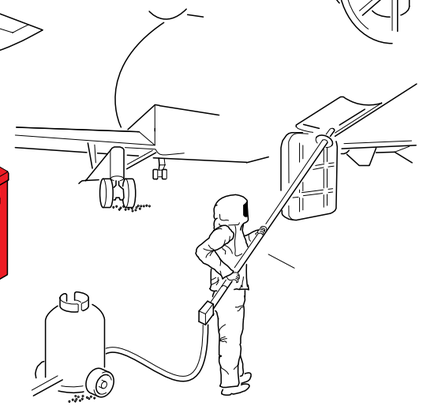

BATTERY IN CABIN CEILING

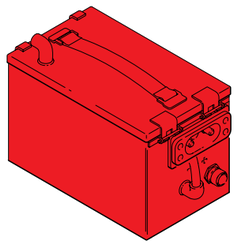

MAIN BATTERY IN AVIONIC COMPARTMENT

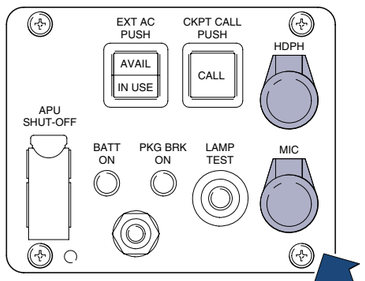

INTERPHONE IN EXTERNAL SERVICE PANEL

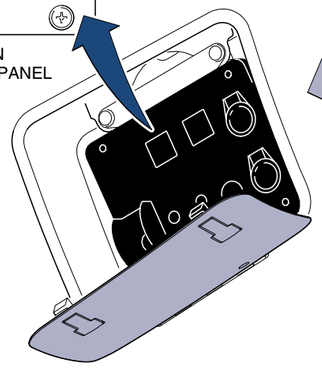

EXTERNAL SERVICE PANEL

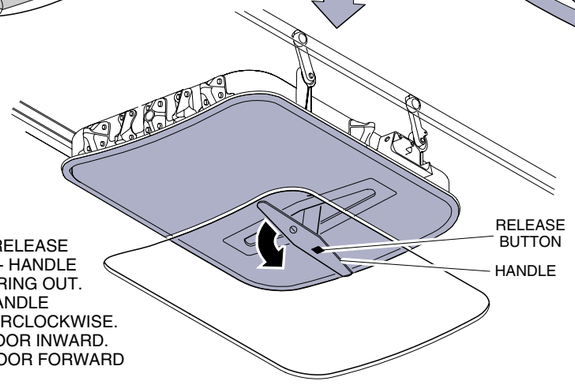

1. PRESS RELEASE BUTTON- HANDLE WILL SPRING OUT.
2. TURN HANDLE COUNTERCLOCKWISE.
3. PUSH DOOR INWARD.
4. SLIDE DOOR FORWARD OR AFT.

AVIONICS COMPARTMENT DOOR

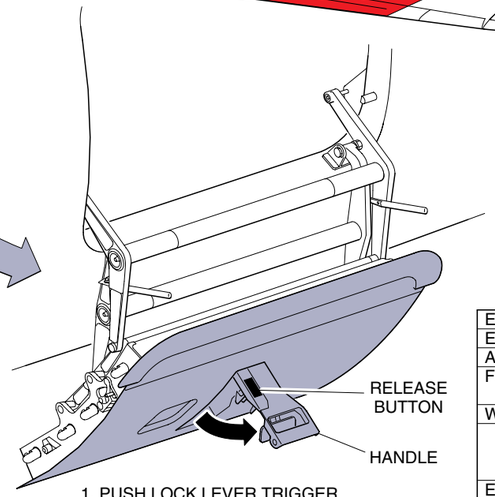

1. PUSH LOCK LEVER TRIGGER TO UNLOCK.
2. LIFT DOOR HANDLE FULLY.
3. PULL DOOR OUTWARDS.

FORWARD & CENTER CARGO COMPARTMENT DOOR

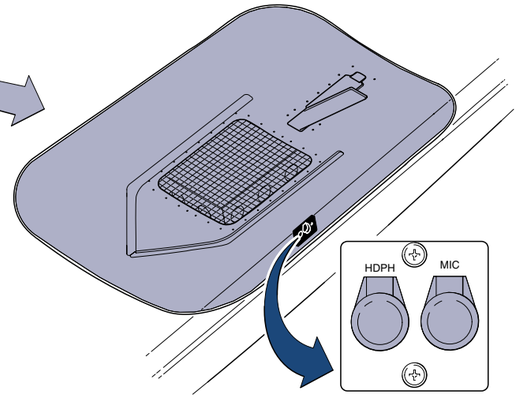

1. PRESS RELEASE BUTTON.
2. PULL HANDLE DOWN.

INTERPHONE IN AVIONIC COMPARTMENT

AFT EQUIPMENT COMPARTMENT DOOR

ENGINE FIRES	HALON OR DRY CHEMICAL
EXHAUST NOZZLE FIRE	HALON OR DRY CHEMICAL
APU FIRE	HALON OR DRY CHEMICAL
FUEL FIRE	DRY CHEMICAL FOR LEAKING FUEL AND FOAM ON GROUND SPILL AREA
WHEEL AND BRAKE FIRES	WATER FOG OR DRY POWDER.
	APPROACH LANDING GEAR FROM FORWARD OR AFT. STRAND UPWIND OF FIRE TO AVOID SKYDROL FUMES.
ELECTRICAL FIRES	HALON OR DRY CHEMICAL
FLIGHT COMPARTMENT AND CABIN AREA FIRES	HALON 1211, OR DRY POWDER, OR WATER EXTINGUISHER
CARGO COMPARTMENT FIRE	HALON
AFT EQUIPMENT COMPARTMENT FIRE	HALON

WARNING **RECOMMENDED FIRE FIGHTING AGENTS**

RJ900CC-MAST-R01-SH02